Capri 35 and Capri 50

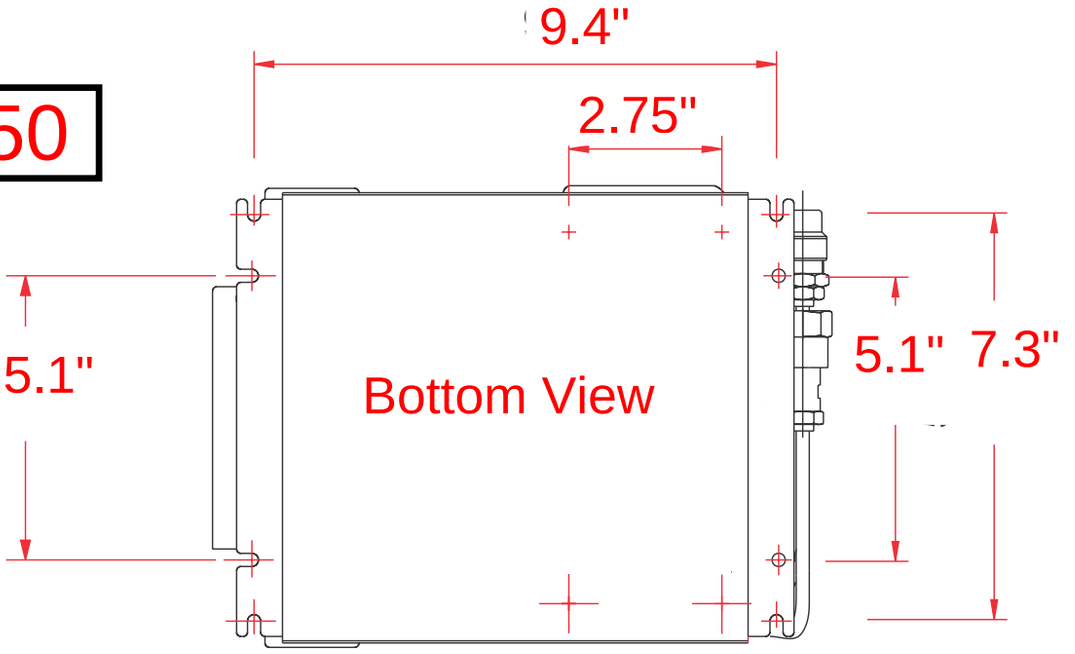

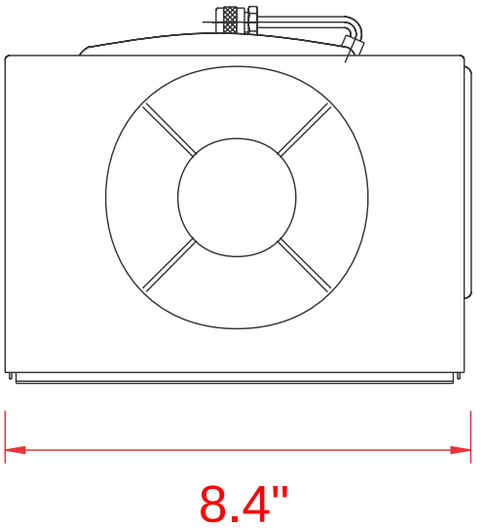

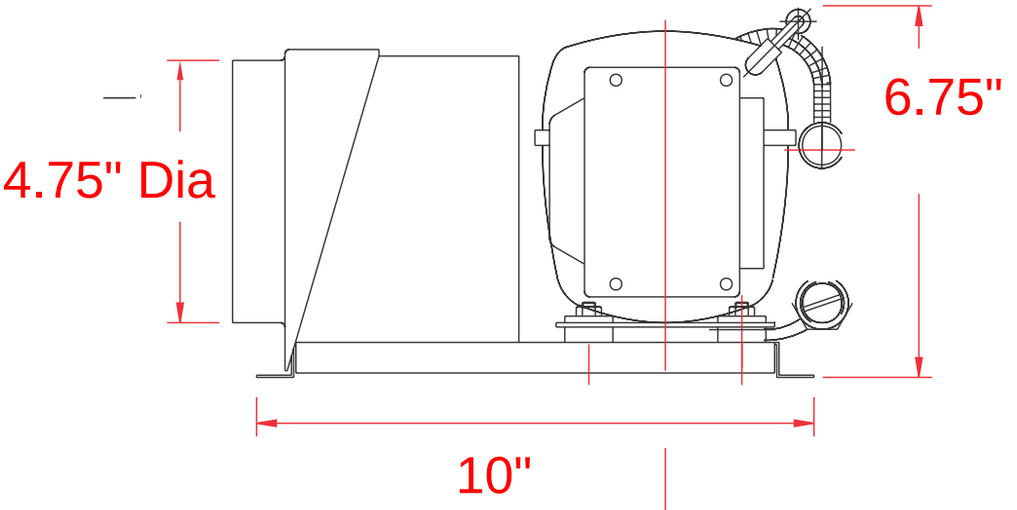

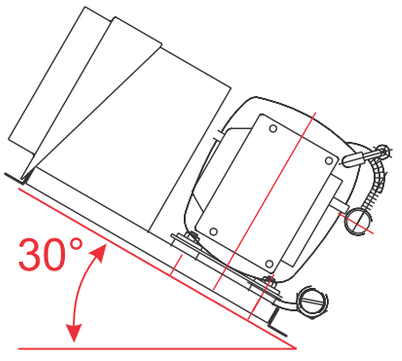
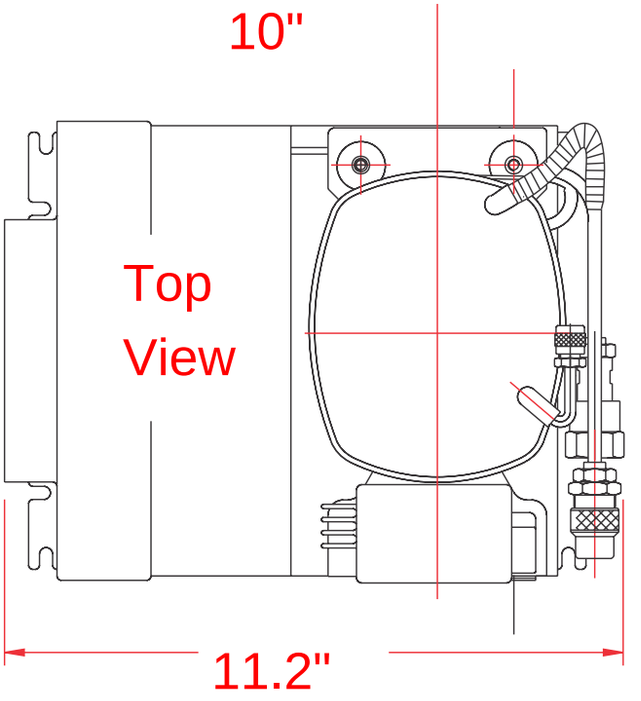
Max Heel for Continuous Duty