MK3 POWERBOARD CONNECTIONS

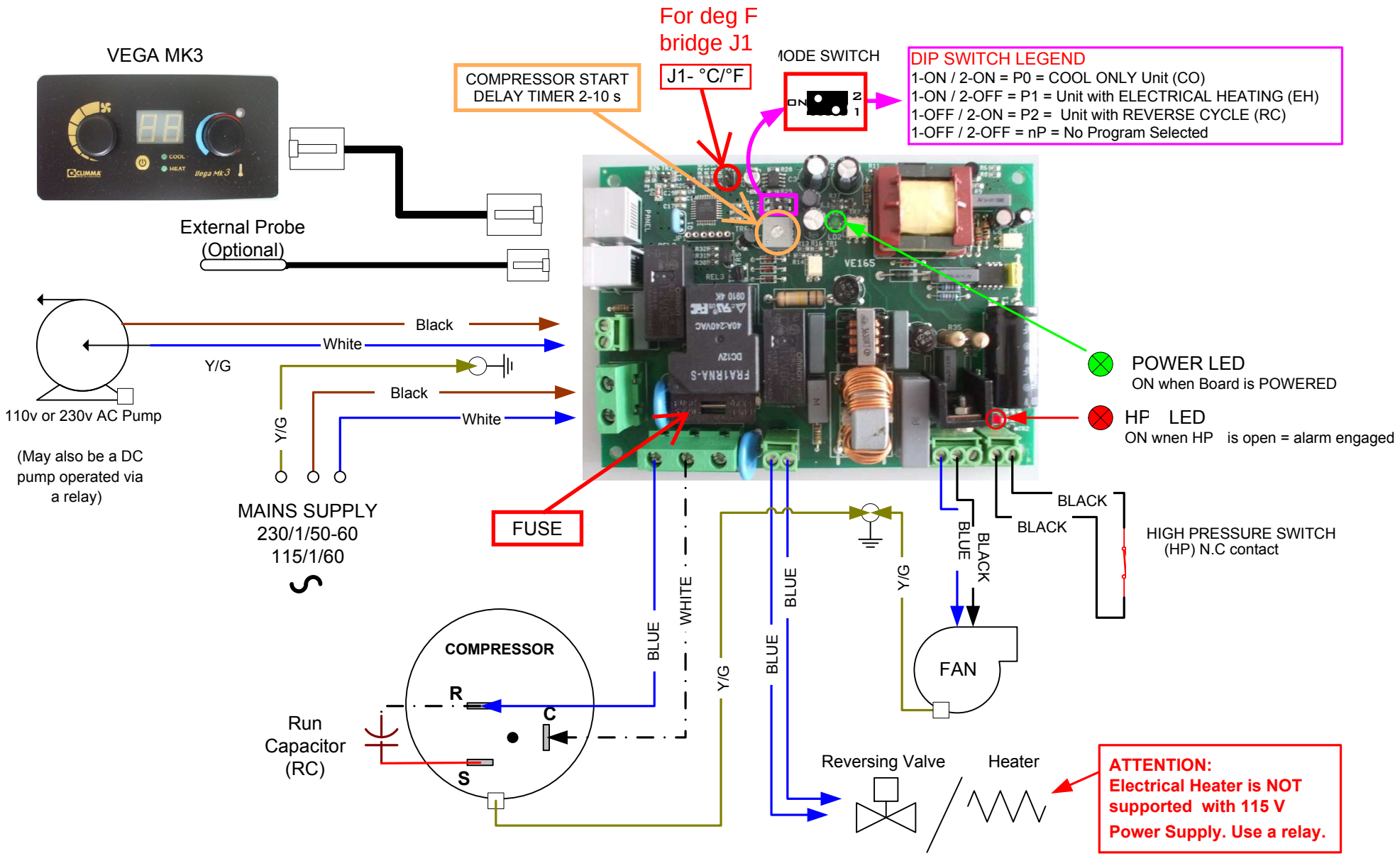

CLIMMA MARINE AIR CONDITIONING C835

RW 2/3/11