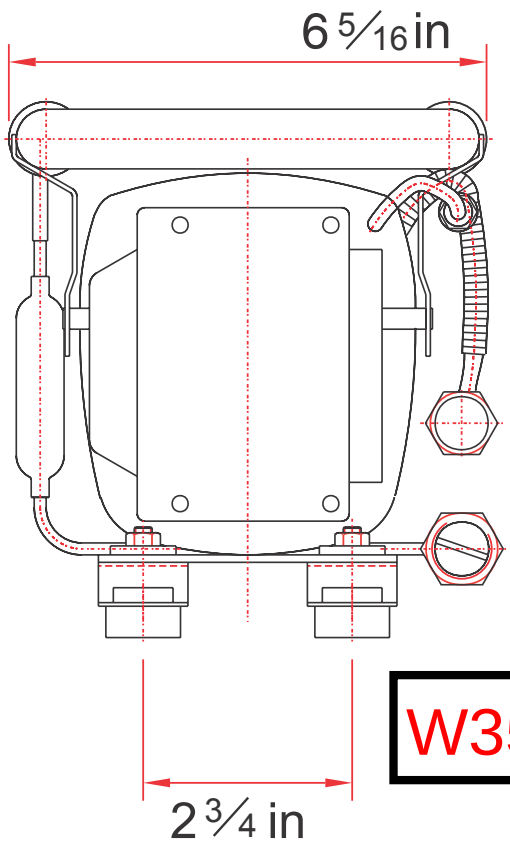

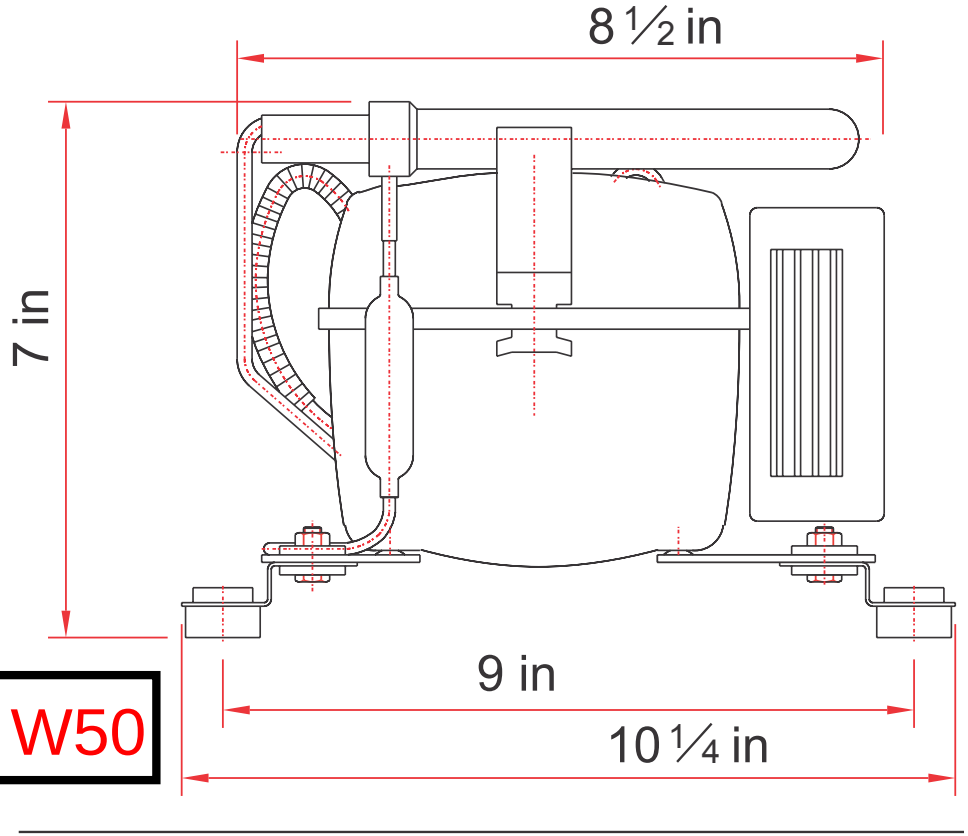

W35 - W50

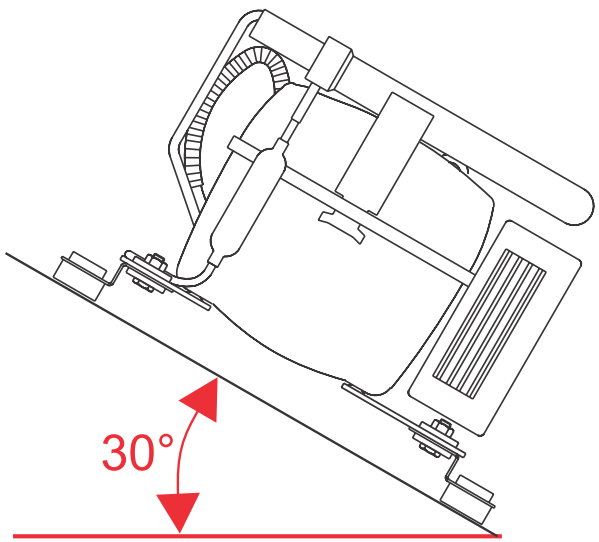

Max heel for continous duty

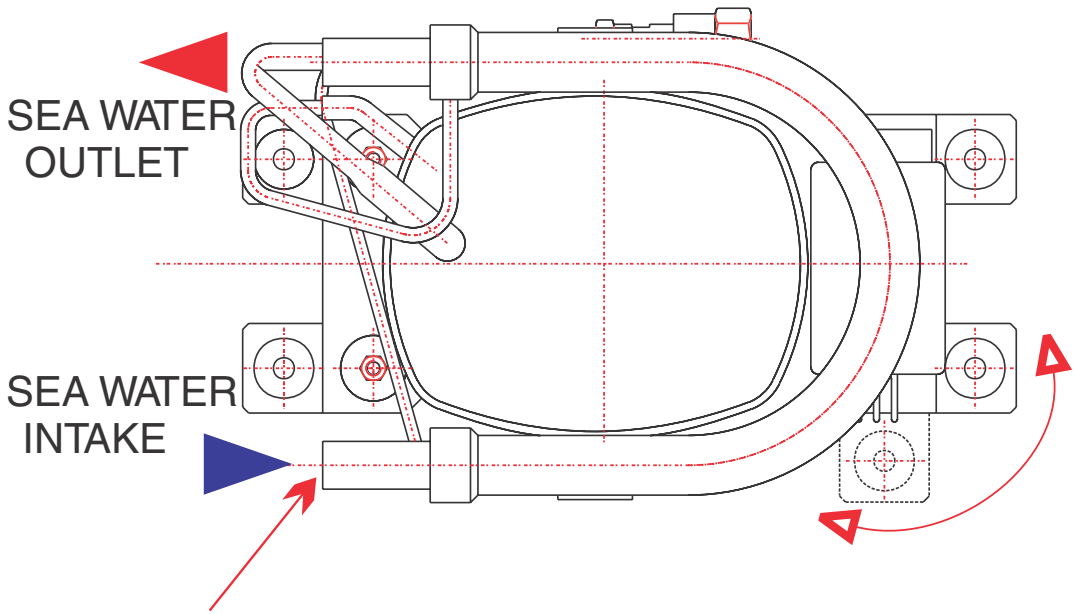

Diam. 5/8 in

TOP VIEW