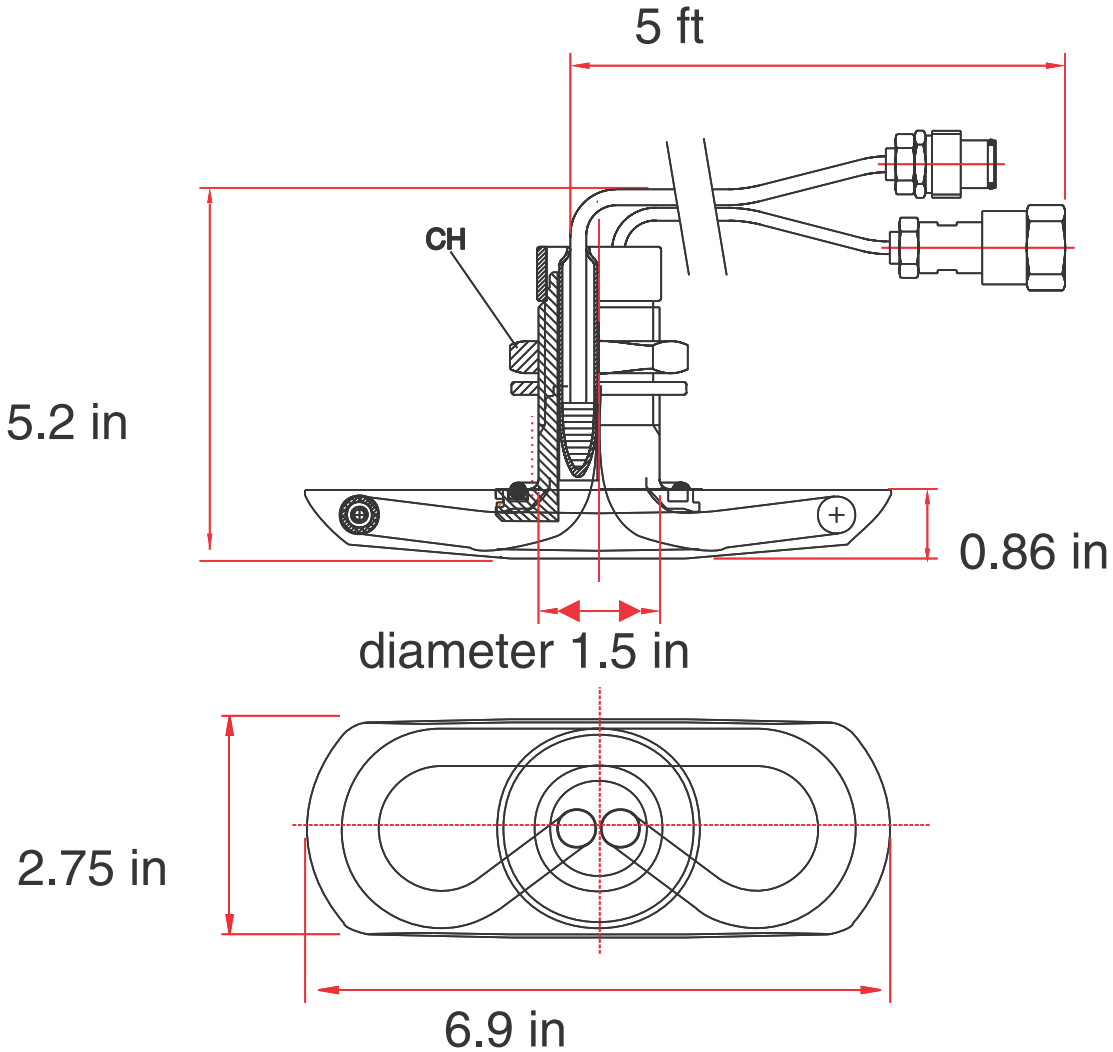
5 ft
CH
5.2 in
0.86 in
diameter 1.5 in
2.75 in
6.9 in